arova®

# CABINETRY INSTALLATION GUIDE

STOP

Please read this installation instruction BEFORE installations. If the product is not installed in accordance with these instructions by a qualified tradesperson to a tradesperson standard. Failure to do so, your Arova warranty may be void and the home owner may have a claim against you (the installer).

**BEFORE INSTALLATION:** Inspect thoroughly to ensure the product has not been damaged and is correct.

Installation is acceptance of goods.
**NO CLAIMS FOR DAMAGES OR INCORRECT PRODUCTS WILL BE RECOGNISED AFTER INSTALLATION.**

## INSTALLERS TO COMPLETE

| | |
|---|---|
| Date Installed: | |
| Installer's Name: | |
| License #: | |
| Business Name: | |
| Phone #: | |
| Product Installed: | |
| Signature: | |

* Please leave document to home occupier for future reference.

## TOOLS REQUIRED FOR INSTALLATION

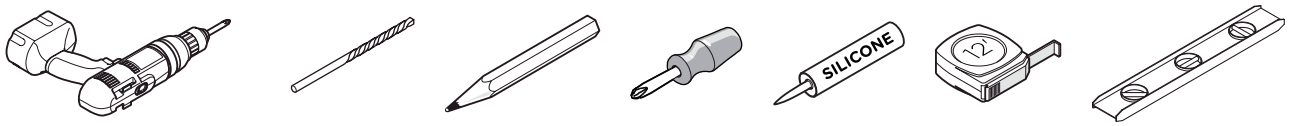


This product comes with a right-handed door as default. To install doors to the left, you can move the hinge brackets to the left panel of the carcass. If you choose to reverse the doors, Arova is exempted from any claims on holes, markings and any blemishes from previous installation on the right panel as these are very normal and expected from installation.

# PRIOR TO INSTALLATION

## 1. Inspect products for any damages

**Within 48 hours of receiving your goods, unpack your Arova product and check for any possible freight damages, missing parts or incorrect items.** Contact Arova (info@arova.com.au) in writing immediately with your order number, product code and attach clear images where appropriate.

## 2. Keep 300mm away from wet areas

It is recommended that cabinets are installed at least 300mm away from wet areas. Do not expose the cabinet to shower sprays or bath water splash as materials used in the construction of our tallboy units are moisture and humidty resistant, not water proof.

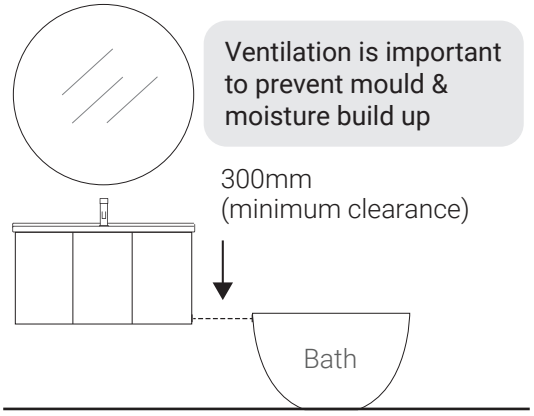


## 3. Ensure walls are plumb and straight

Before installing, check that your wall is straight and plumb. If it is impossible to make the wall straight, the cabinet need to be packed out so that it can be finished straight. If your cabinet is fixed to non-plumb wall, the cabinet will be finished twisted and the doors will fall out of alignment and not operate properly.

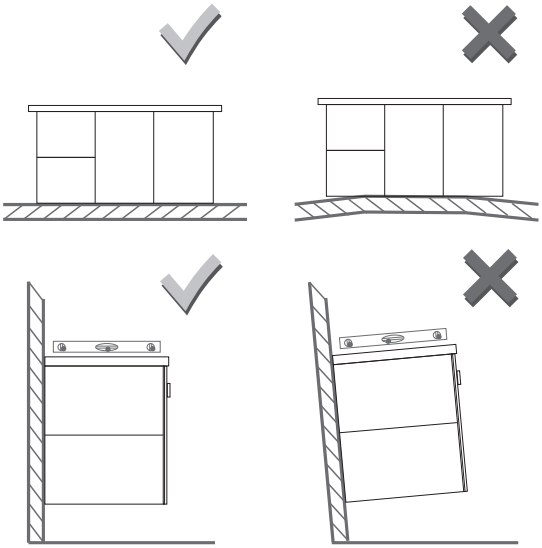

## 4. Check for support beams

Support beams are required between the studs to give a solid wall backing to attach the vanity. The vanity must be attached to a minimum of 2 support beams or studs.

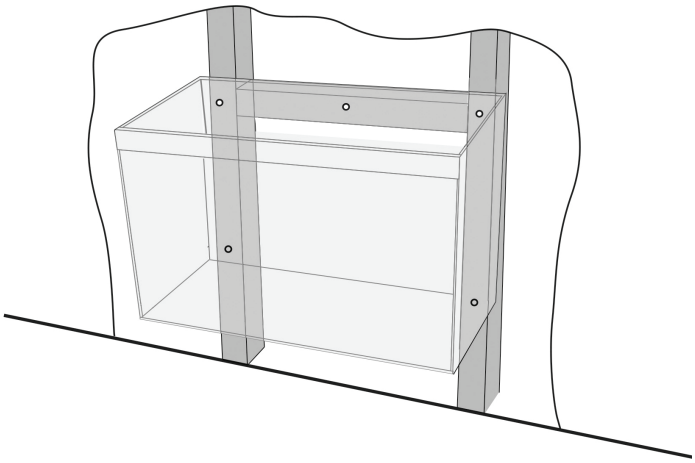

# INSTALLATION

## 1. Preparing the Cabinet

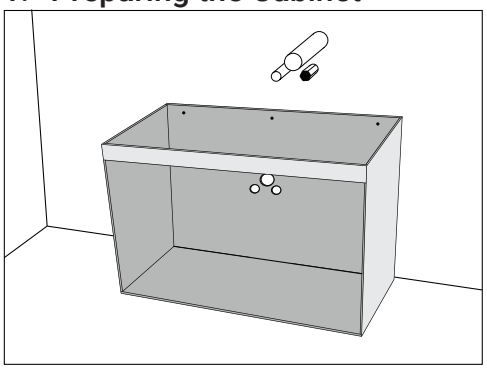

Remove all drawers from the cabinet and put them aside to avoid damage or scratch. Refer to the adjustment section on the next page to see how to remove.

Position the cabinet at desired height. Factor in the top/basin thickness to get the correct height.

a) Measure correct plumbing locations and drill holes for plumbing in the back panel.

## 2. Position the Cabinet

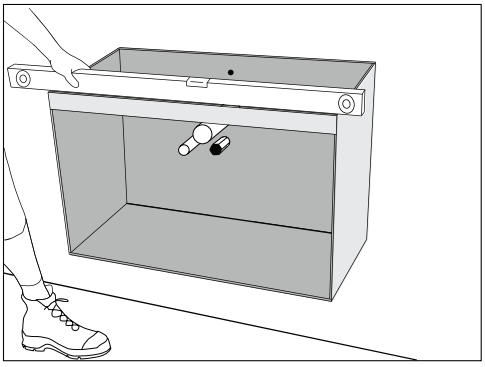

b) Position the vanity over the pipes. For wall hung vanities, support from under and elevate the cabinet to desired height. Use a spirit level to check the cabinet is complete level.

## 3. Securing the Cabinet

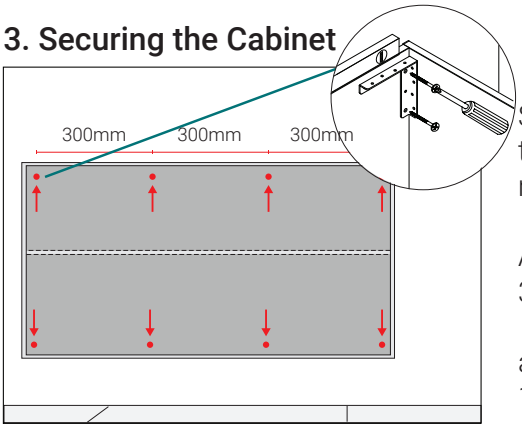


Secure the cabinet to the wall. For wall hung cabinets, fix the cabinet through the mounting brackets at top left and right corner and any other mounting brackets where available.

Add extra fastening in between the mounting brackets at the a maximum 300mm horizontal spacing.

a) Fasten cabinet to the wall at the bottom of the cabinet no further than 100mm from each end and no higher than 50mm from the base panel.

## 4. Install Top

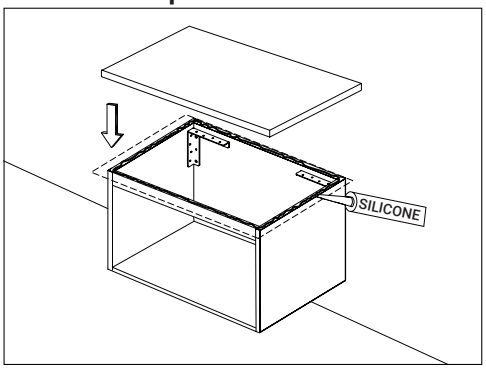


**DO NOT INSTALL** vanity top until the cabinet is level and plumb in all directions!

b) Apply a countinuous bead of non-acidic silicone to top four edges of the vanity and at the back where top meets the wall. Position the top (ideally the top will equally overhang on each side) and ensure the top surface is level.

c) Seal any visible gaps between the cabinet and the top and the basin with continuous bead of silicone.

## 5. Sealing

d) Seal all edges where cabinet and top meet the floor and wall to prevent water penetration.

# ADJUSTMENT

After installation every cabinet will need some adjustments as doors and drawers move during transport and installation. The cabinet must be level before adjustments are made. There may be some movement in transportation and installation which causes doors and/or drawers to be unaligned. It is the responsibility of the installer to ensure the adjustments are done correctly. No warranty claims wil be considered until this adjustment process is completed. Refer to the instructions below.

## Doors Removal & Adjustment

### Remove Door

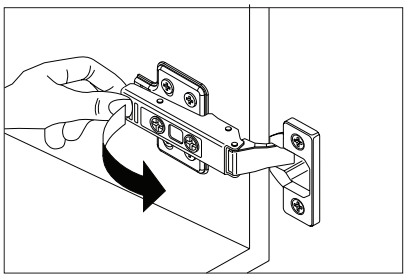

Apply finger pressure to clip at the end of hinge and pull forward to release.

### Refit Door

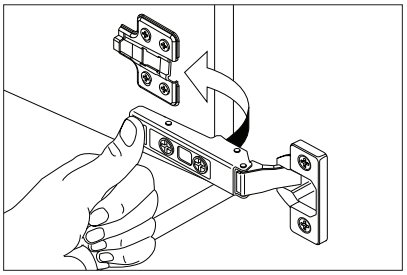

Put doors back to cabinet. Engage hinge arm to mounting bracket, press the back of hinge into place. When you hear a 'click' sound, the hinge is engaged.

### Adjust door overlay

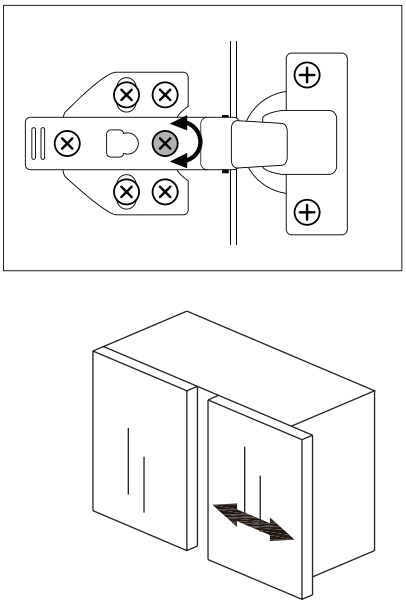

### Adjust door depth

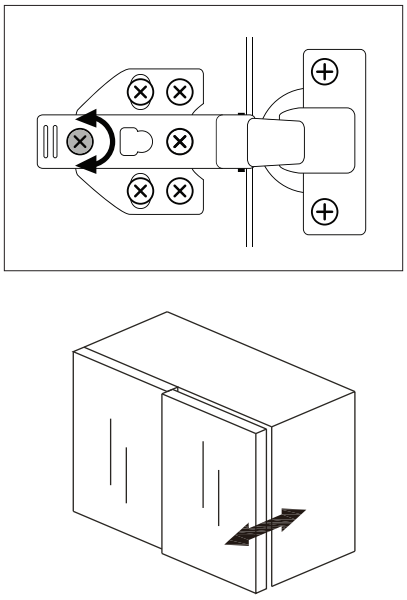

### Adjust door height

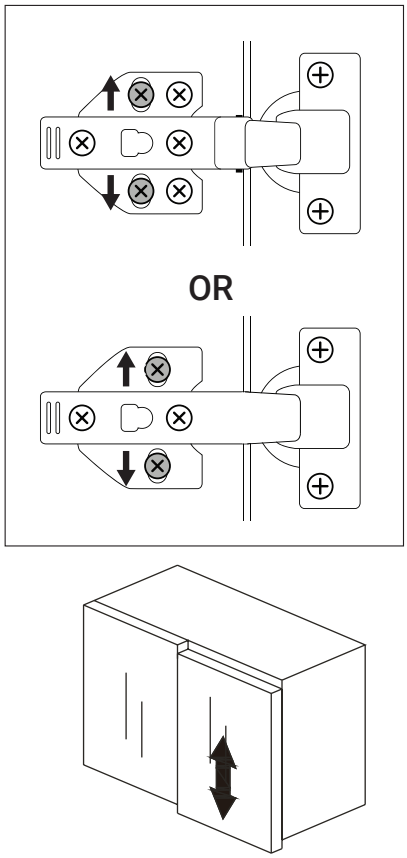

# ADJUSTMENT

## Drawers Removal & Adjustment

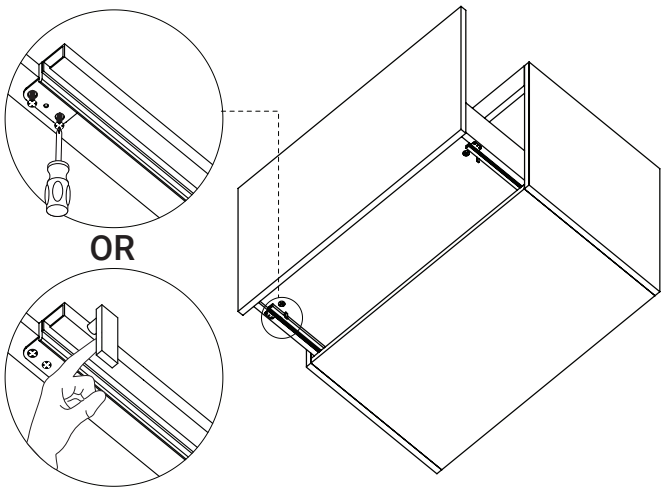


Fully extend drawer and loose screws underneath the drawer at the front. Pull out tabs until you hear a click or remove the screws.

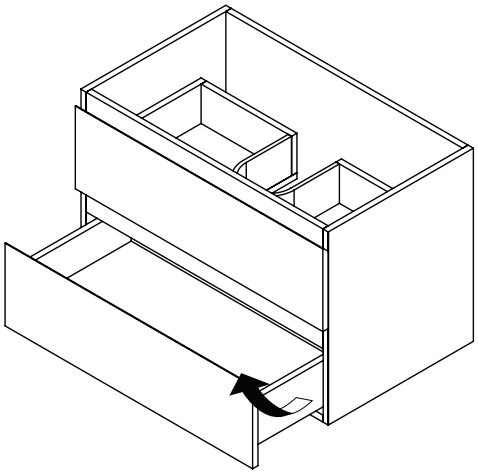

Lift the drawer up and out.

## Re-fitting

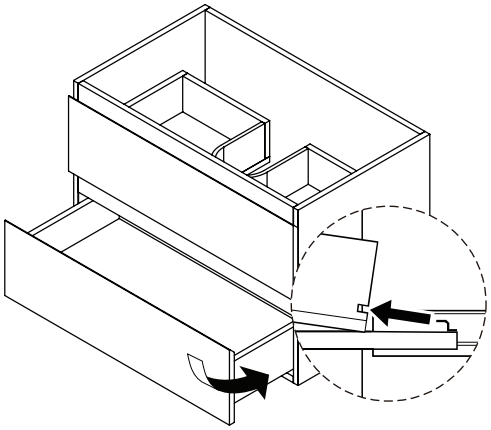

Ensure both drawer slides are fully extended. Hook the drawer to the sliders at the back and ensure the holds at front drop down onto the pin as shown.

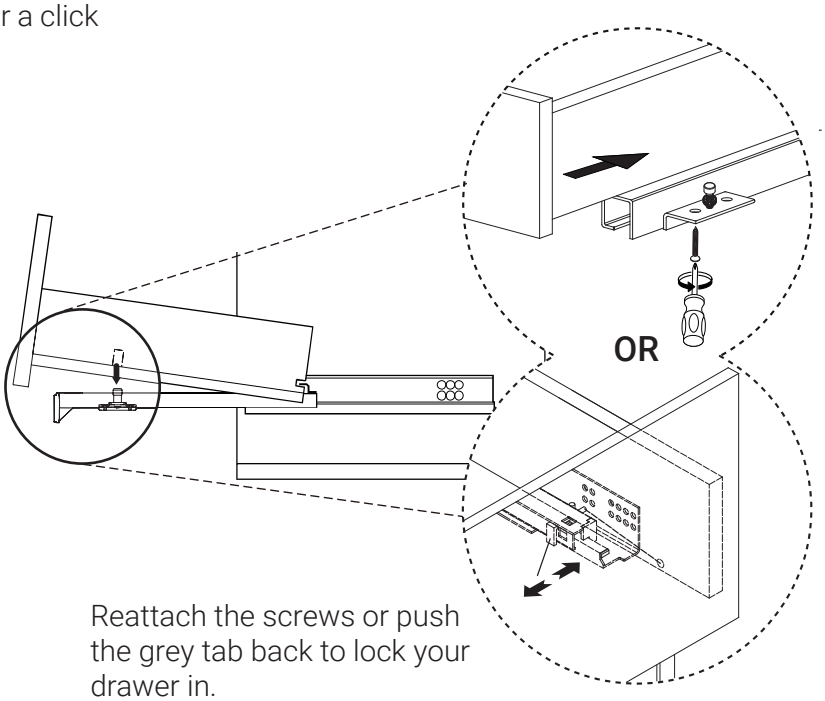


Reattach the screws or push the grey tab back to lock your drawer in.

## Drawer Vertical Adjust:

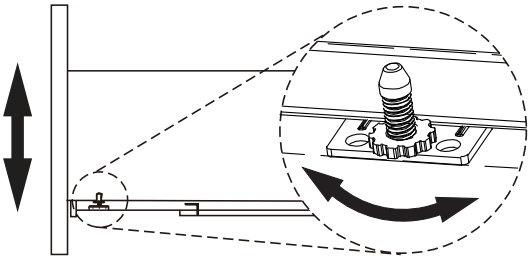

Adjusting nut on underside of drawers.

To adjust the drawer UP (backwards tilt) turn anti-clockwise.
To adjust the drawe DOWN (forward tilt) turn clockwise.

# ADJUSTMENT

## For KODI Cabinets Mid Drawer

### Drawer Removal & Re-fitting

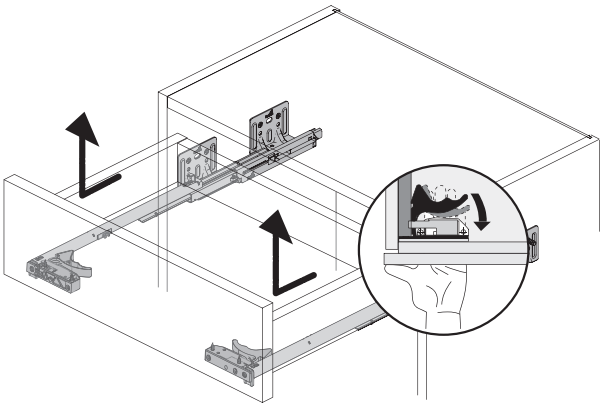

Open the drawer fully. Press and hold the release levers located underneath both sides of the drawer. Lift the drawer upwards and carefully pull it away from the cabinet to remove it from the runners.

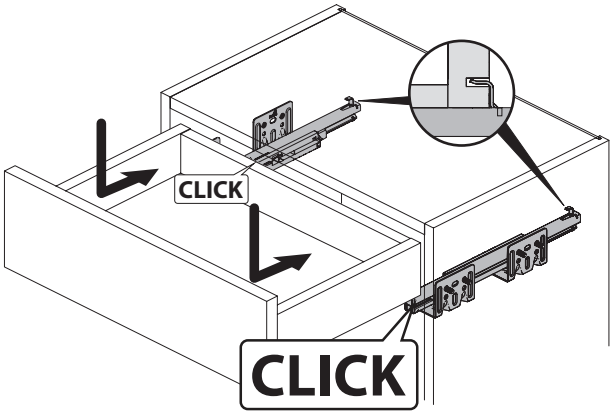


Ensure both drawer slides are fully extended. Engage the rear of the drawer with the hooks at the back of the runners, as shown. Place the drawer on the runners and slide it in until you hear 'Clicks' on both sides.

### Mid Drawer Front Height Adjustment

Turn the height adjustment controls on both sides of the drawer to raise or lower the drawer front by up to 2 mm. Adjust each side as required until the drawer front is level and correctly aligned.

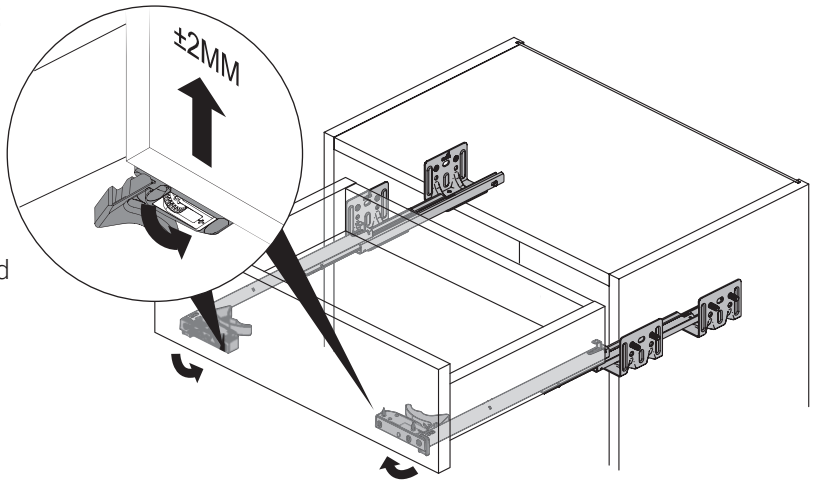


## For Bronte Cabinets

### Drawer Removal & Re-fitting

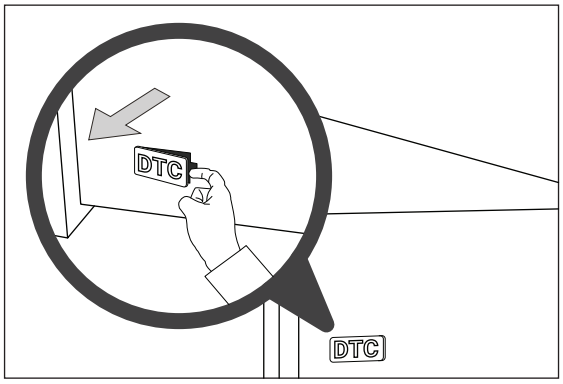


Open the drawer and locate the cover caps on the outer side of the drawer wall. Remove the cover caps to reveal a small lever.

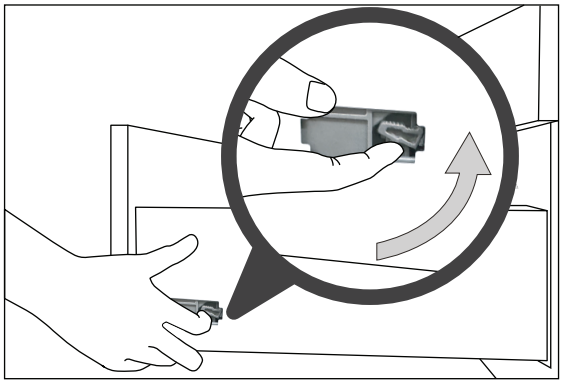

Push both levers up using index fingers and slide the drawer out slowly and give a firm pull to release the drawer from the runners.

# ADJUSTMENT

## Re-fitting:

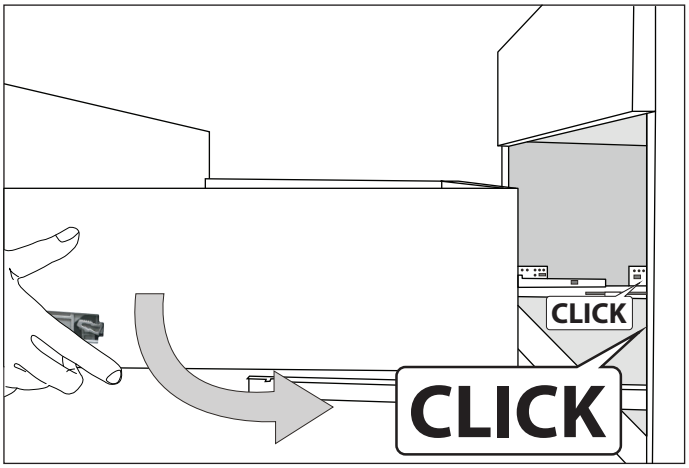


Ensure the runners are pushed back into the cabinet. Place the drawer on the runners and slide it in until you hear 'clicks' on both sides.

Test the drawer by opening and checking that both runners are attached.

*If not, repeat the removal and refitting process .

## Drawer Front Removal & Adjustment

### Low Profile Drawer (Bronte Top Drawer)

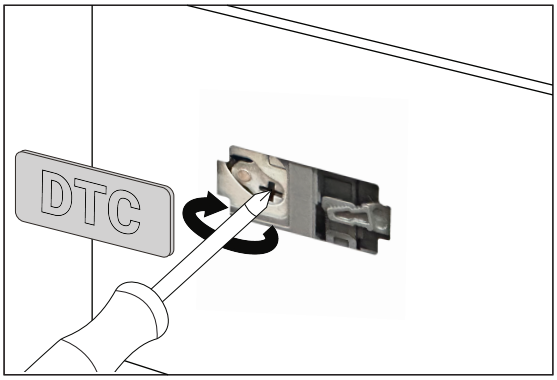


### Remove the drawer from cabinet

Remove the cover caps at the left hand side (LHS) drawer and turn the screw to the left and up to release the drawer front for each drawer runner. It is symmetric for the RHS drawer side. Ensure the cam fasteners on the underside of drawer base are disconneted first.

To reattach the drawer front side the pins on the drawer front back into the drawer wall. It will click into place when attached correctly.

### Adjust Drawer Front Overlay

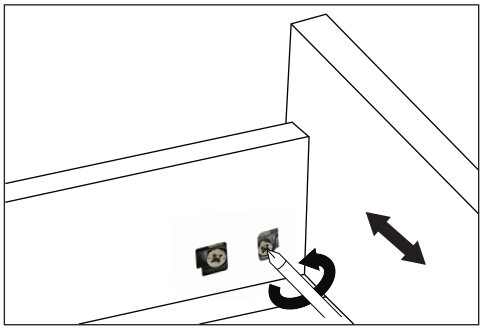

### Adjust Drawer Front Height

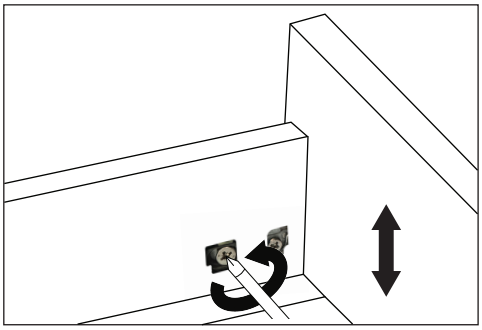

### Adjust Drawer Front Depth

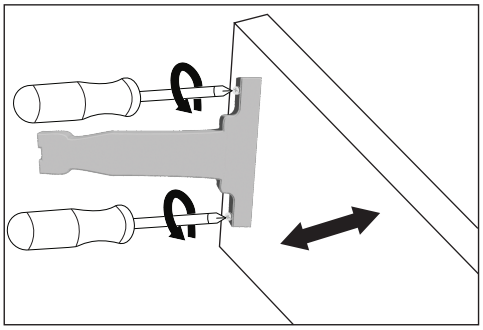

# ADJUSTMENT

## Medium/High Profile Drawer (Bronte bottom drawer)

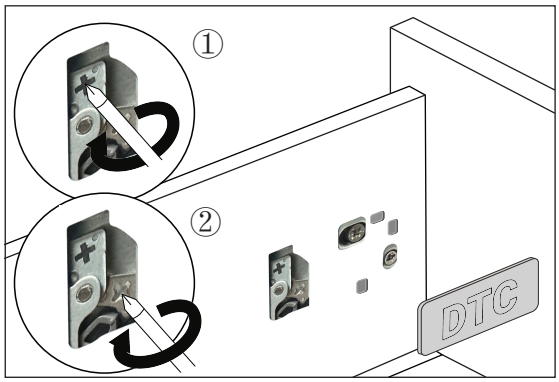


### Remove the drawer from cabinet

Remove the cover caps at the LHS drawer and turn screws to the right and release the drawer front for each drawer runner. It is symmetric for the RHS drawer side. Ensure the cam fasteners on the underside of drawer base are disconneted first.

To refit the drawer front, side the pins on the drawer front back into the drawer wall. It will click into place when attached correctly

### Adjust Drawer Front Overlay

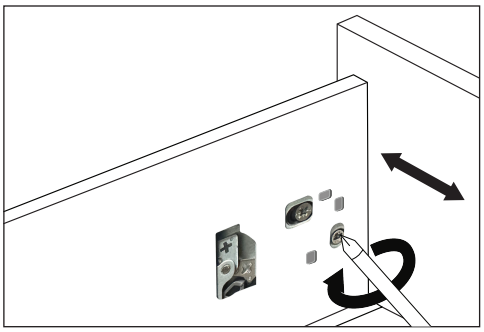

### Adjust Drawer Front Height

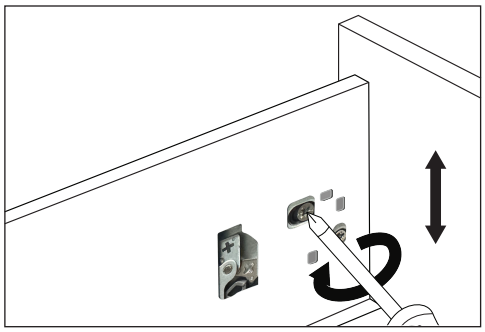

### Adjust Drawer Front Depth

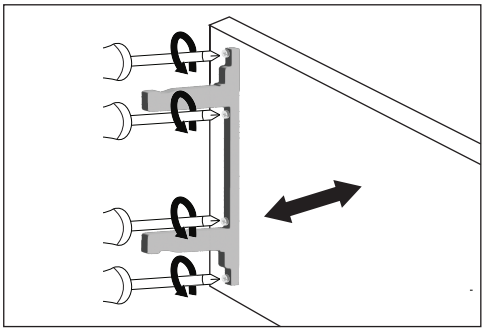

# CARE & MAINTENANCE

Arova products are produced from materials that are well suited to the bathroom however all products require cleaning and maintenance to ensure longevity.

The best method of maintaining the finish is simply to wipe over with a clean, soft cloth regularly. Any water spills should be wiped away immediately. It is important that no abrasive cleaners or wax-based creams are used.

**Scratches**

Avoid contact with hard or sharp objects. If minor scratches of fine marks occur on 2 pac paint surface, rub gently with cutting compound followed by buffing with car polish and a clean, soft cloth.

**Burns**

Avoid placing hot objects, such as hair straighteners, curling tongs on any surface as these will cause burns, disclouration and marking. Should slight accidental damage occur, it may be possible to remove minor marks with the same approach as for scratches above.

**Chemical damage**

Chemical products spills should be removed immediately and any chemical residue should be cleaned with a soft and clean cloth. Examples of common household chemical products: hair dye/lacquer/sprays/removers, bleach, after-shave lotion, nail polish and remover, mineral turpentine, white spirit, kerosene, aerosol propellants and insecticides.

# WARRANTY

For up to date warranty information please go to:
**https://www.arova.com.au/pages/warranty**

For any other further information please contact your nearest Arova showroom